SHELL STRUCTURE MAKING
CONCRETE WORKSHOP

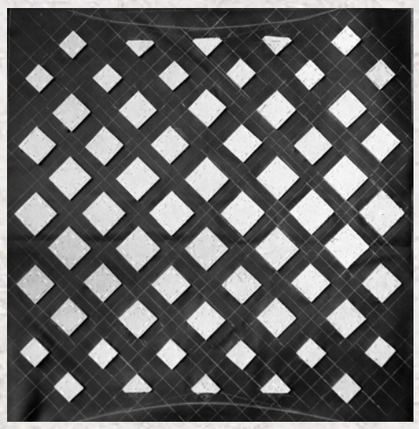

pattern study

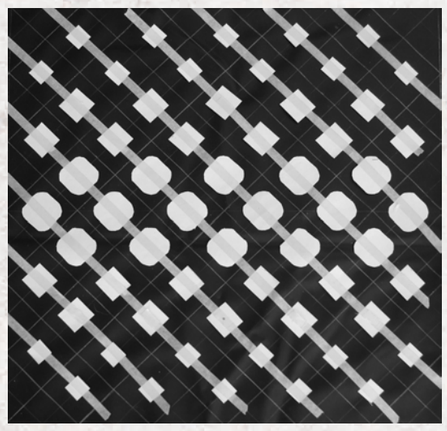

pattern study

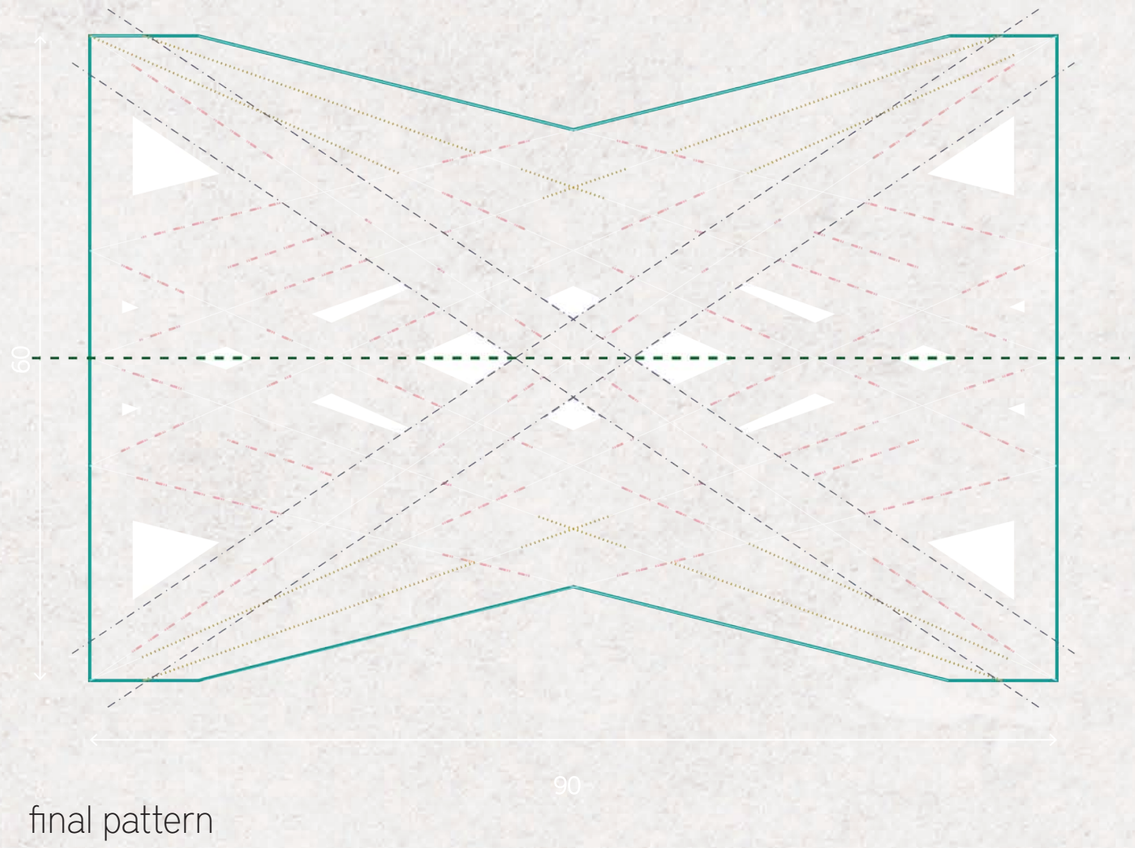

final pattern

concrete shell structure

flow of forces

material reduction

[.ALIEN]

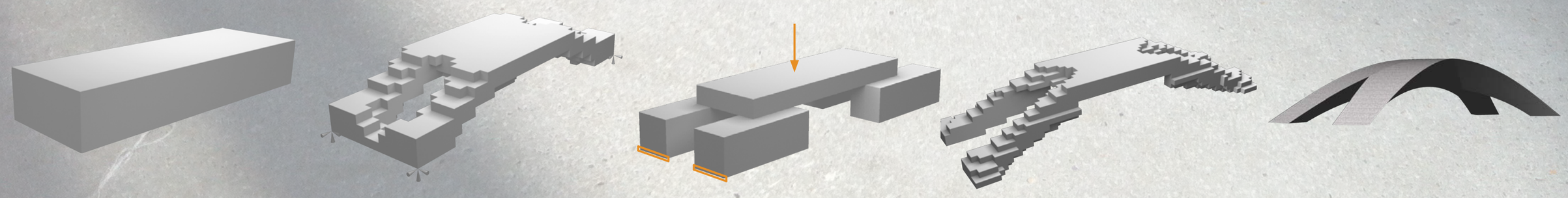


Day 1


Day 2


Day 3

As a starting point for our design we used the Rhino plug-in BESO 3D. This program calculates the most optimal structure within the envelope and the given parameters. We started with the given measurements of 90*30*15 cm and added four fixed load bearing points and a force in the middle. During the optimalisation, the program calculates which parts of the structure are obsolete for carrying the load. Based on the outcome we created a new, more fine-tuned shape, so that the formwork would be more specific for pouring the concrete. We translated the optimal shape into a smooth Rhino model. We then squished the model to use it as a reference for cutting the fabric into a suitable textile formwork for pouring the concrete.

design team

Jorik Bais	4151143
Koen de Veth	4087917
Shijie Zhang	4404106
Yanthe Boom	4139496
Luuk van Vliet	1526030

TEKTONIEK workshop
Fabric Formwork & ESO

7-10 April 2015 - TU Delft

Cement&BetonCentrum TU Delft bureaubakker weber BEAMIX

THREE-LEGGED SPAN

FORM FOLLOWS FABRIC

An experimental design for a horizontal span out of concrete. This shape is based on physical models in a process of trial and error and the results of structural optimalisation software. The holes were necessary in the search for a lighter model. Designing by making sketches was very important for the esthetics of the endresult. The envelope is 90 x 15 x 30 cm and the first concept was a span with multiple fins of concrete of which this three-legged span is a deduction. By sewing and pre-stressing the fabric mould we were able to make the formwork.

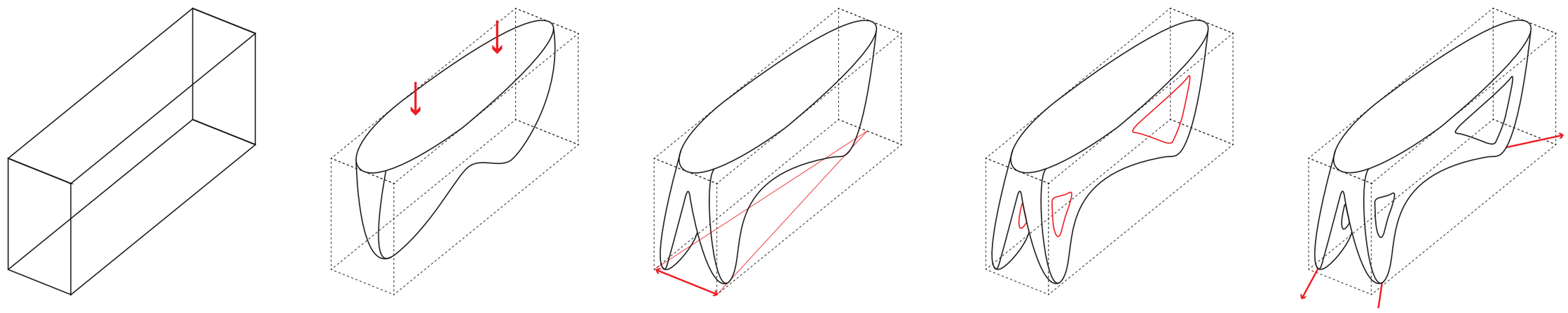

design team
Lauren Boots (4140451)
Aniek Borgeld (1516833)
Midas Delnooz (4099850)
Christian Sluijmer (4078829)
Paul de Wilde (1534831)

TEKTONIEK workshop
Fabric Formwork & ESO

7-10 April 2015 - TU Delft

Cement&BetonCentrum TU Delft bureaubakker weber BEAMIX

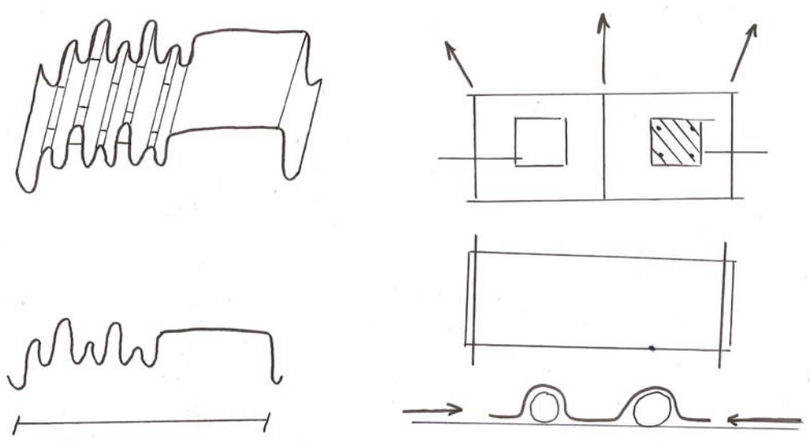

Evolution of ideas
derived from the tests

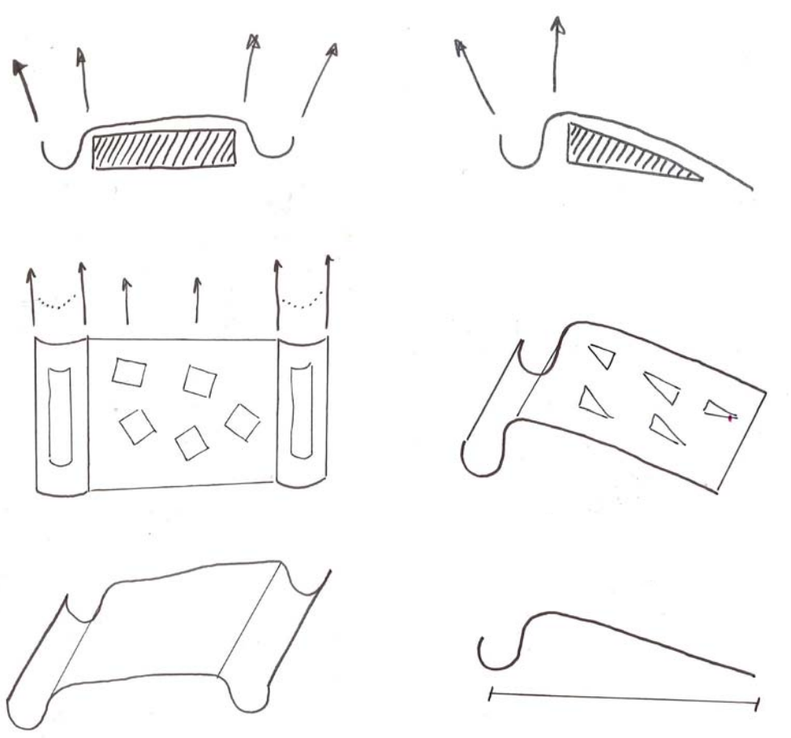

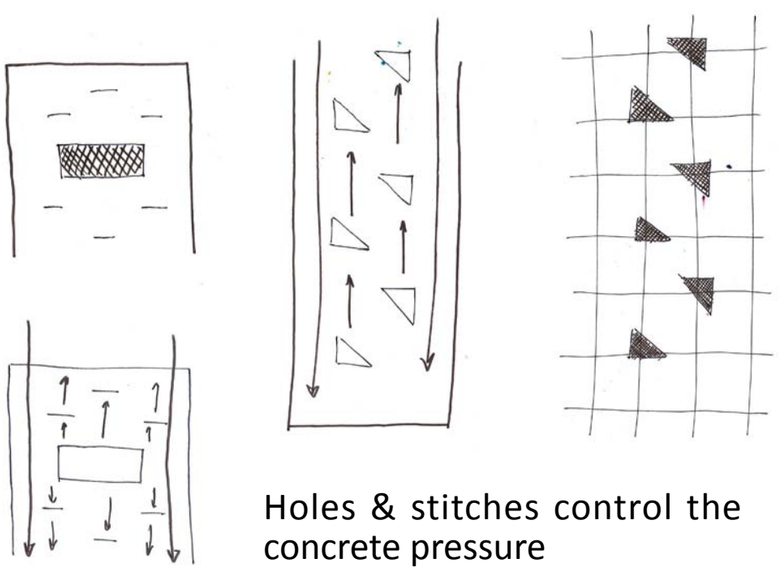

Holes & stitches control the
concrete pressure

Process

Holes using sewings or
wood pieces

How to make curves?

Test for the final prototype

The framework
fabric - foam - wood

1st Step
Removing the wood

2nd Step
On side and removing the fabric

3rd Step
Last touches

THE FINAL RESULT

MAKING 2014 - 15 / Q4

FIETS LONGUE

Design Team

IREN KOOMEN 4064119
MAICOL CARDELLI 4402820
LIVIA GHIDONI 4432576
HUIYI QIAN 4402987

TEKTONIEK workshop
Fabric Formwork & ESO

7-10 April 2015 - TU Delft

Cement&BetonCentrum TU Delft bureaubakker weber BEAMIX

WEAVING SHELTER

How much does a concrete fabric weight?

CONCEPT

The proposal is based on two elements: concrete and fabric. It is interesting the infinite number of forms that you can make with a fabric but it is also interested to investigate the idea of the fabric itself. If you see the fabric with a microscope you can understand its interesting structure. This structure could be made of concrete?

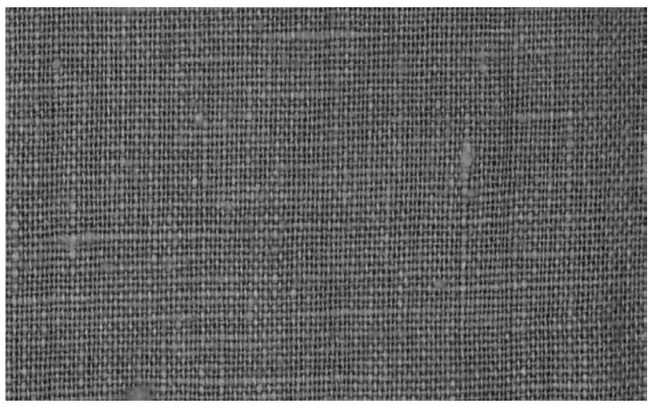

1 X

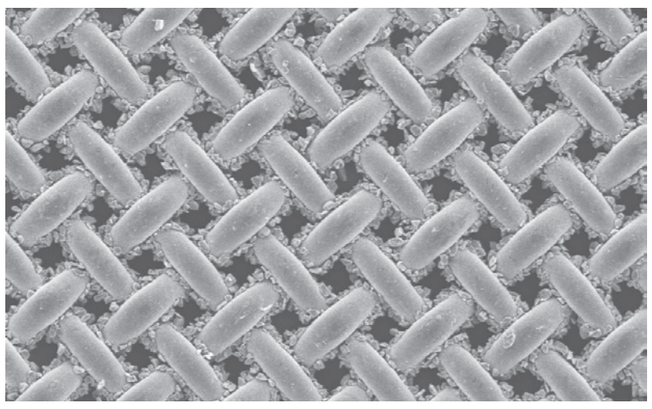

20 X

40 X

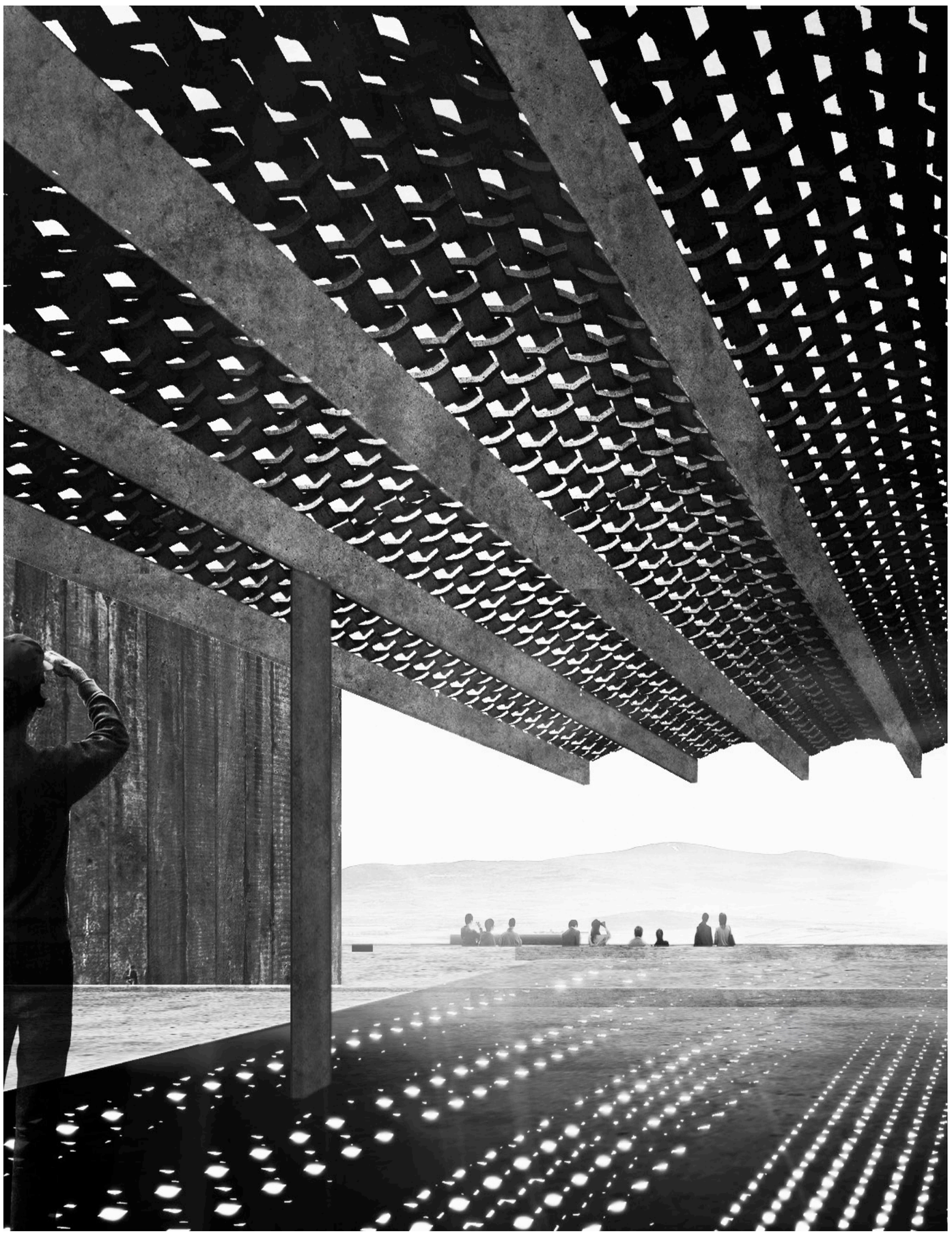

VISUALIZATION

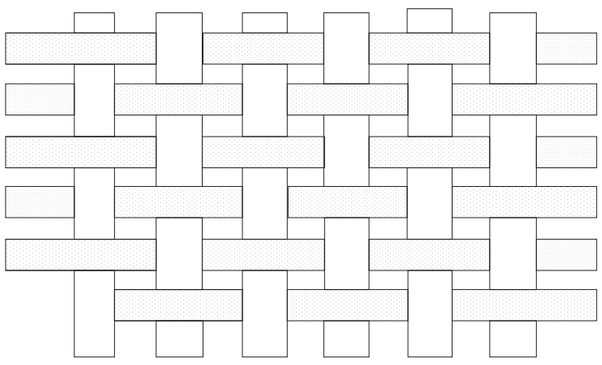

WEAVING PATTERN

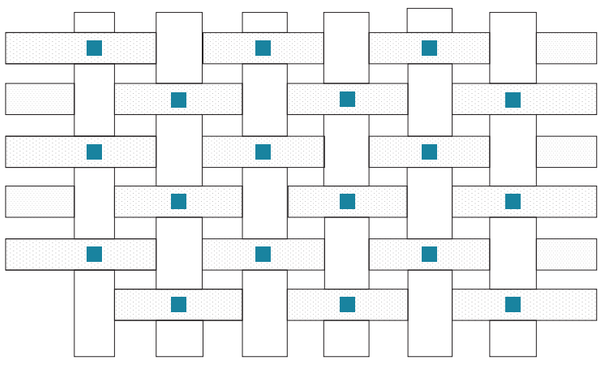

CONCRETE CONNECTIONS

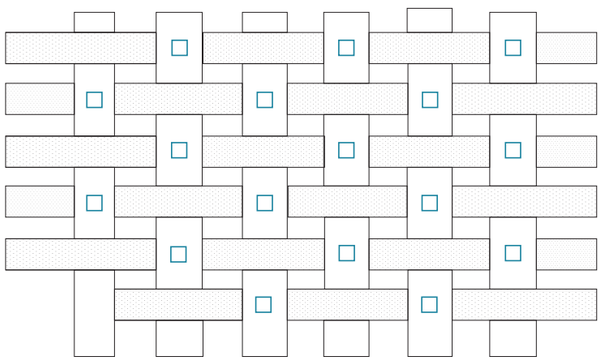

SPACES FOR LIGHT

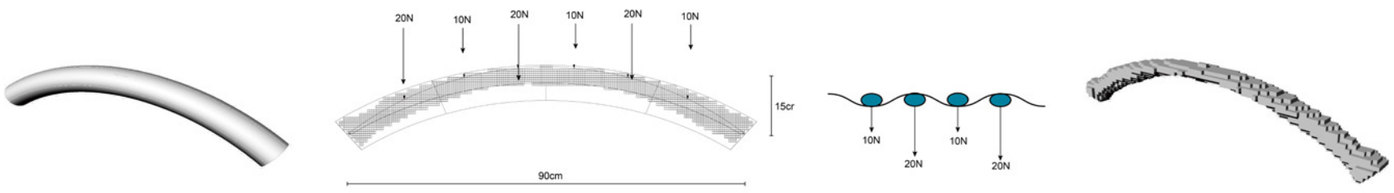

OPTIMIZATION

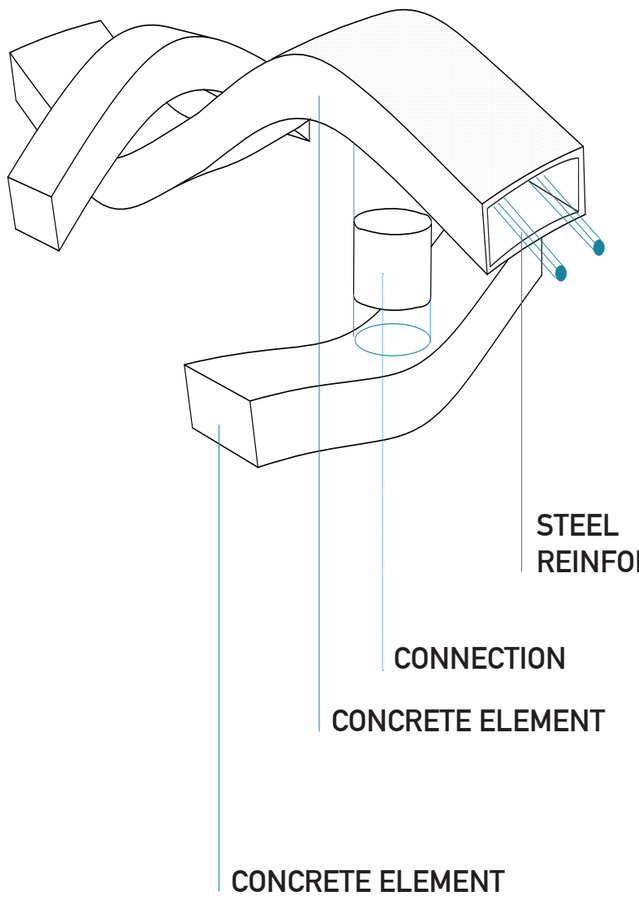

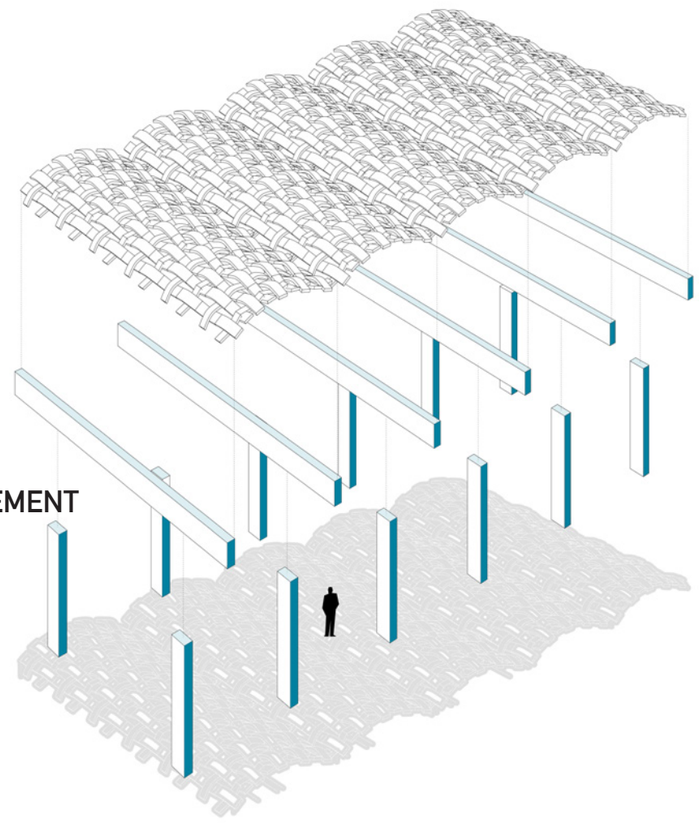

AXONOMETRIC VIEWS

design team
Myriam Dautermann
Andrea Govi
Xiangyu Zheng
Ruofan Gan
Anna Koolen

TEKTONIEK workshop
Fabric Formwork & ESO

7-10 April 2015 - TU Delft

Cement&BetonCentrum TU Delft bureaubakker weber BEAMIX

Cement Spiral

TRIAL 1

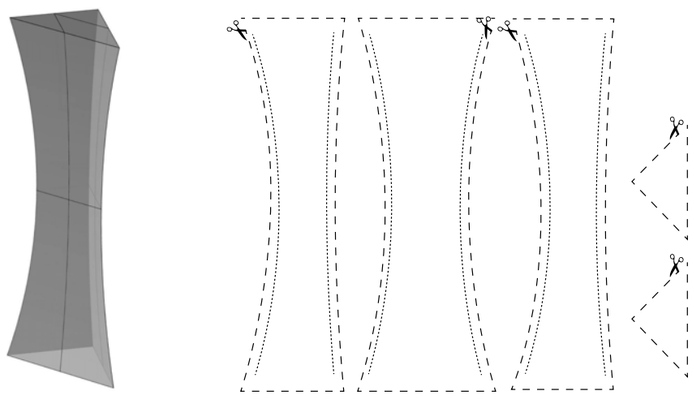

TRIAL 2

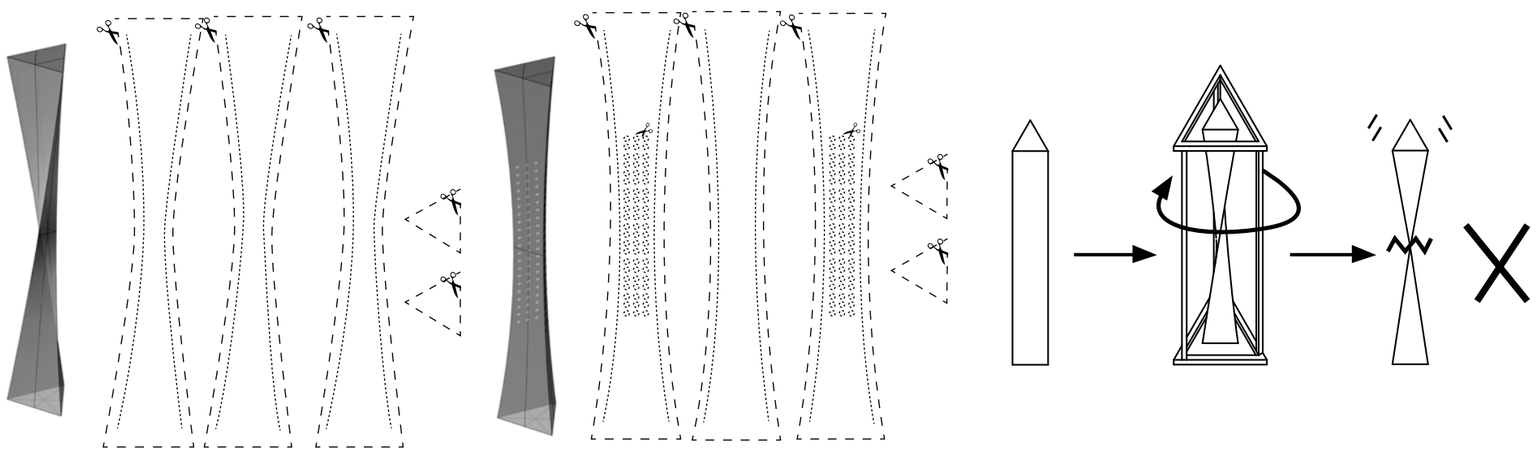

FINAL

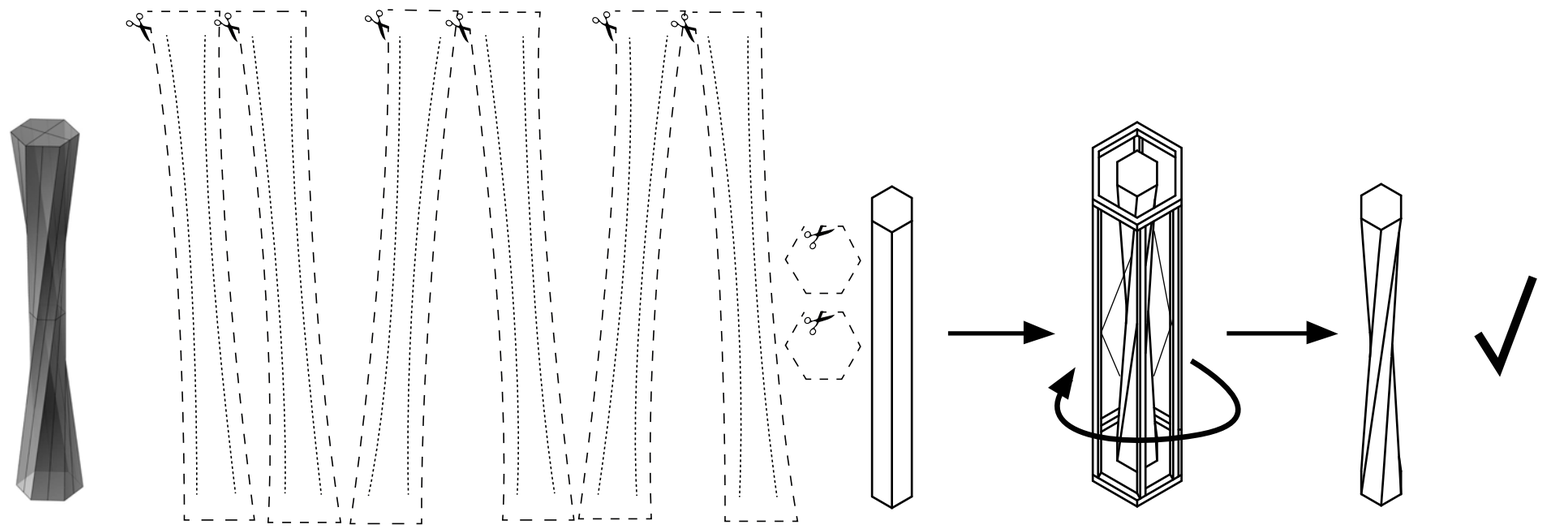

design team
Michael Raeburn (4432797)
Giacomo Rizzi (4402545)
Shao Shan (433261)
Hannah Barth (4007239)

TEKTONIEK workshop
Fabric Formwork & ESO

7-10 April 2015 - TU Delft

Cement&BetonCentrum TU Delft bureaubakker weber BEAMIX